REVISION RECORD				
REV	ECN.	DESCRIPTION	DRFT	DATE

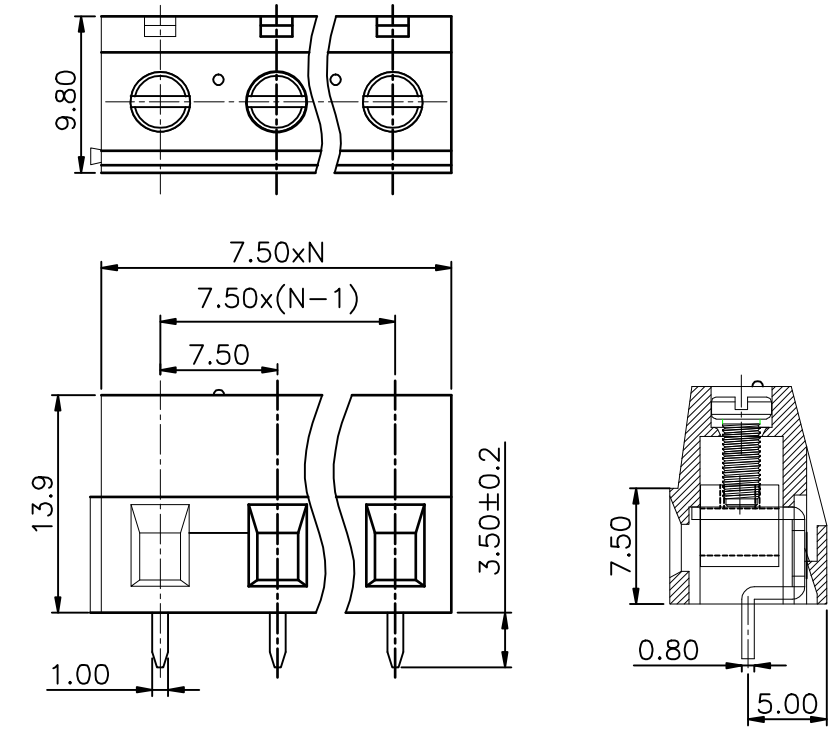

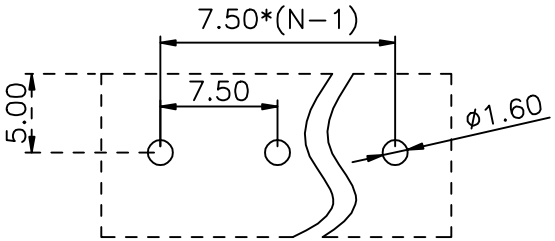

PCB´ LAYOUT

NOTE 1:
UL标准(UL Standard)
1. 额定电压与电流：300V/10A
Rated voltage/Rated current:300V/10A
2. 功频耐压：AC1600V/Min
Withstanding Voltage:AC2500V/Min
3. 线径范围：30～12AWG
Wire range:30～12AWG
IEC标准(IEC Standard)
1. 额定电压与电流：450V/18A
Rated voltage/Rated current：450V/18A
2. 线径范围：2.5mm²
Wire range ：2.5mm²
NOTE 2:
1. 间距(Pitch)：7.50mm
2. 使用温度范围：-40℃～+105℃
Operating temperature：-40℃～+105℃
3. 剥线长度：6～7mm
Stripping length：6～7mm
4. 符合RoSH环保要求
RoHS Compliance
5. 额定扭矩:0.4N.m 3.54[Lb. in]
(Rated torque):0.4N.m 3.54[Lb. in]
6. 未标注公差表
Undimensioned tolerances

间距方向公差 (mm) Pitch range in mm			实际尺寸公差 (mm) Nominal dimension range in mm					—	⌒	⌭
≤6	6 ~ 10	10 ~ 24	≤30	30 ~ 60	60 ~ 100	100 ~ 150	> 150	0.1/10	∠	
±0.15	±0.20	±0.30	±0.20	±0.30	±0.50	±0.70	±1.00	±1°		

订购方式(HOW TO ORDER)
MX128V - 7.50-□□P-□ - □ - □□□□

型号 Series NO. | 间距 Pitch | 极数 Poles | 客户型号 Customer Request

1. 单间距 Single Pitch
2. 双间距 Double Pitch

颜色(Color)
1. 灰色(Gray) 2. 蓝色(Blue)
3. 黑色(Black) 4. 绿色(Green)
5. 橙色(Orange) 6. 红色(Red)
7. 黄色(Yellow) 8. 白色(White)
9. 透明(Transparent)

ITEM	NAME OF PART	MATERIAL	NOTES
4	(Cage)方盒	(Copper alloy) 铜合金	(Ni plated)镀镍
3	(Contact)触点	(Copper alloy) 铜合金	(Sn plated)镀锡
2	(Screw)螺丝 M3	(Steel) 钢	(Ni plated)镀镍
1	(Housing)塑件	PA66	UL94V-0

PART NO.: /
APPD: /
CHKD: /
DRFT: /
THIED ANGLE PROJECTION

宁波迈科思电子科技有限公司
NINGBO MAX ELECTRONIC TECHNOLOGY CO.,LTD

型号	MX128V-7.50-XXP		
系列	MX128V-7.50	页码	1/1
图号	MX128750001	比例	1:1