RoHS Compliant | Customer Drawing

REV.	ECN NO.	DESCRIPTION	DATE	DESIGN

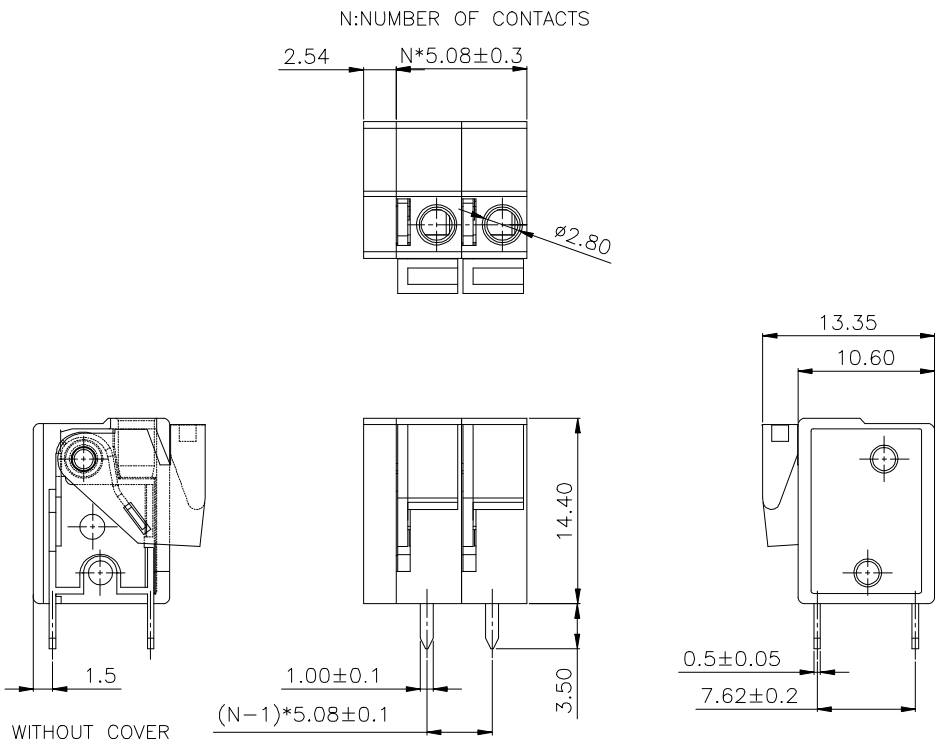

- MATERIAL
  WIRE GUARD: STAINLESS STEEL(SUB301)
  PIN HEADER : BRASS, TIN PLATED
  HOUSING : PA66, UL94V−0
- ELECTRICAL
  RATED VOLTAGE : 250V
  RATED CURRENT : 10A
  CONTACT RESISTANCE : 20mΩ
  INSULATION RESISTANCE : 5000MΩ/1000V
  WITHSTANDING VOLTAGE : AC2000V/1Min
  WIRE RANGE: 22−14AWG 1.5mm²
- MECHANICAL
  TEMP.RANGE : −40℃∽+105℃
  MAX SOLDERING : +250℃, FOR 5 SEC.
  STRIP LENGTH: 10mm

订购方式/HOW TO ORDER

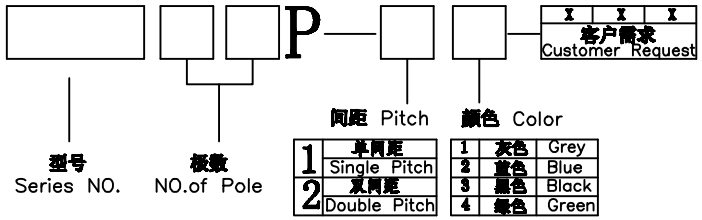

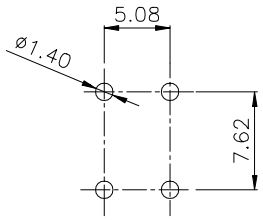

RECOMMEND PCB LAYOUT(TOLERANCE=±0.05)

N=No.of contacts

CONTACT WITH US:
TEL:+86−574−63505128 FAX:+86−574−63532183
E−Mail:sales@nbmax.com.cn Website:www.nbmax.com.cn

公差一览表 TOLERANCE UNLESS OTHERWISE				宁波迈科思电子科技有限公司 NINGBO MKX ELECTRONIC TECHNOLOGY CO.,LTD					
X.	±0.25	X°.	±5°	单位 UNITS	mm	制图 DRAWING	陈冬梅	产品名称 TITLE	MX142V−5.08
.X	±0.20	.X°	±2°	角法 VIEW		设计 DESIGN	顾兴伟		
.XX	±0.15	.XX°	±1°	比例 SCALE	1:1	审核 CHKD		产品料号 PART NO.	MX142V−5.08
.XXX	±0.02	.XXX°	±0.5°	版本 VER	A0	核准 APPD		图号 DRAW NO.	MX142V−5.08−0A
日期 DATE		2012.07.10							