REVISION RECORD				
REV	ECN.	DESCRIPTION	DRFT	DATE

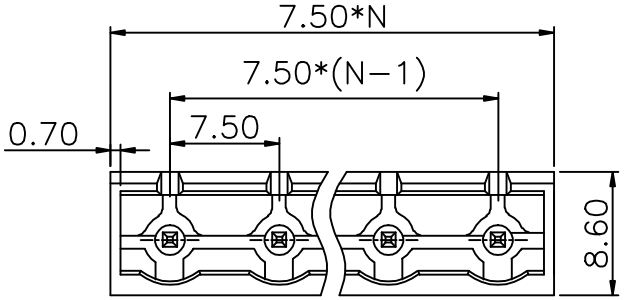

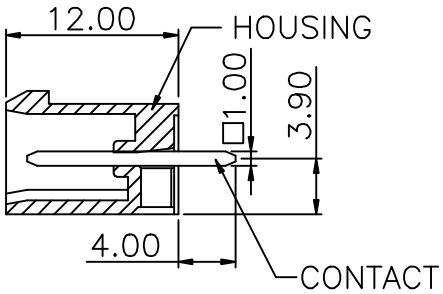

NOTE 1:
UL标准(UL Standard)
1. 额定电压与电流：300V/15A
Rated voltage/Rated current:300V/15A
2. 功频耐压：AC1600V/Min
Withstanding Voltage:AC1600V/Min
IEC标准(IEC Standard)
1. 额定电压与电流：400V/20A
Rated voltage/Rated current：400V/20A
NOTE 2:
1. 间距(Pitch)：7.50mm
2. 使用温度范围：-40℃～+105℃
Operating temperature：-40℃～+105℃
3. 符合RoSH环保要求
RoHS Compliance
4. 未标注公差表
Undimensioned tolerances

间距方向公差 (mm) Pitch range in mm			其他尺寸公差 (mm) Nominal dimension range in mm					— ⌒ ⌭
≤6	6 ~ 10	10 ~ 24	≤30	30 ~ 60	60 ~ 100	100 ~ 150	> 150	0.1/10 ∠
±0.15	±0.20	±0.30	±0.20	±0.30	±0.50	±0.70	±1.00	±1°

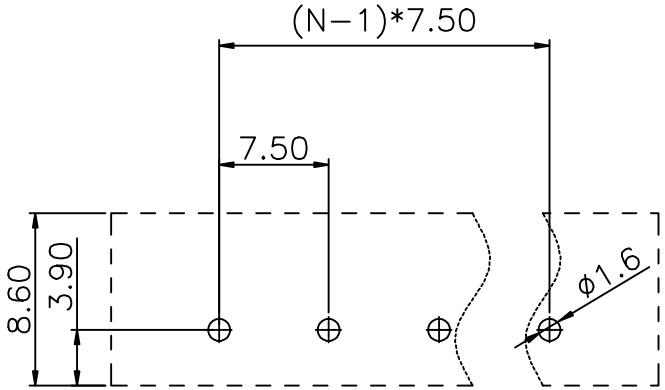

PCB LAYOUT

订购方式(HOW TO ORDER)
MX2EDGVC- 7.50-□□P-□ - □ - □□□□

型号 Series NO. | 间距 Pitch | 极数 Poles | 客户型号 Customer Request

1. 单间距 Single Pitch
2. 双间距 Double Pitch

颜色(Color)
1. 灰色(Gray) 2. 蓝色(Blue)
3. 黑色(Black) 4. 绿色(Green)
5. 橙色(Orange) 6. 红色(Red)
7. 黄色(Yellow) 8. 白色(White)
9. 透明(Transparent)

ITEM	NAME OF PART	MATERIAL	NOTES
2	(Contact)触点	(Copper alloy) 铜合金	(Sn plated)镀锡
1	(Housing)塑件	PA66	UL94V-0

PART NO.: /
APPD: /
CHKD: /
DRFT: /
THIED ANGLE PROJECTION

宁波迈科思电子科技有限公司
NINGBO MAX ELECTRONIC TECHNOLOGY CO.,LTD

型号	MX2EDGVC-7.50-XXP		
系列	MX2EDGVC-7.50	页码	1/1
图号	MX2EDGVC750001	比例	1:1